TOTAL QTY	MARK	DESCRIPTION	LENGTH	UNIT WT.	REMARKS
1	'm359'	W40X324	56'-0 5/8"	18179,9	A992
1	m2102	W27X368	15'-10 1/4"	5826,8	A992
2	p953	PL3/4X9	1'-1 15/16"	52,5	44W
2	p1010	PL1/2X13 15/16	1'-7 1/8"	72,6	A572-GR.50
2	p1018	PL1/2X13 15/16	1'-7 5/16"	73	A572-GR.50
1	p1025	PL1 3/4X7 7/16	7'-1 9/16"	308,4	44W
2	p1191	PL3/4X15 9/16	1'-10"	133,9	A572-GR.50
4	p1198	PL3/4X8 3/4	2'-3 7/16"	203,4	44W
1	p1207	PL3/4X8 3/4	4'-7 7/8"	103,8	44W
2	p1231	PL3/16X8 3/4	1'-7 1/2"	18,3	44W
2	p1237	PL3/4X6 5/8	2'-1 3/8"	71,1	44W
1	p1242	PL1 3/4X7 7/16	7'-4 9/16"	319,2	44W
1	p1255	PL5/8X6 1/2	5'-5 5/8"	75,7	A572-GR.50
2	p1256	PL5/8X6 1/2	2'-10 3/8"	74,3	A572-GR.50
2	p1272	PLT3/8X7 7/16	1'-1 1/4"	20,7	44W
4	p1273	PL3/4X7 7/16	3'-0 7/16"	228,7	44W
2	p1348	PL3/16X5 3/4	1'-7 1/8"	11,8	44W
2	p1355	PL3/4X5 3/4	2'-0 15/16"	56,2	A572-GR.50
2	p1356	PL3/4X5 3/4	2'-7 13/16"	73,1	A572-GR.50
1	p1360	PL5/8X14 3/8	1'-3 1/4"	32,3	44W
1	p1361	PL5/8X14 3/8	1'-2 3/4"	31,4	44W
1	p1909	PL1 1/4X2	4'-7 1/4"	39,2	44W
1	p1993	PL5/8X8 1/16	1'-2 15/16"	18,4	44W
1	p1994	PL5/8X8 1/16	1'-2 15/16"	17,8	44W
2	p2013	PL3/4X7 7/16	3'-0 1/2"	115,1	44W
1	p2315	PL2 1/2X14 3/4	3'-3 1/4"	410,1	44W
2	p2340	PL3/16X6 1/2	1'-10 3/4"	15,8	44W
				TOTAL.WT=26583.3	

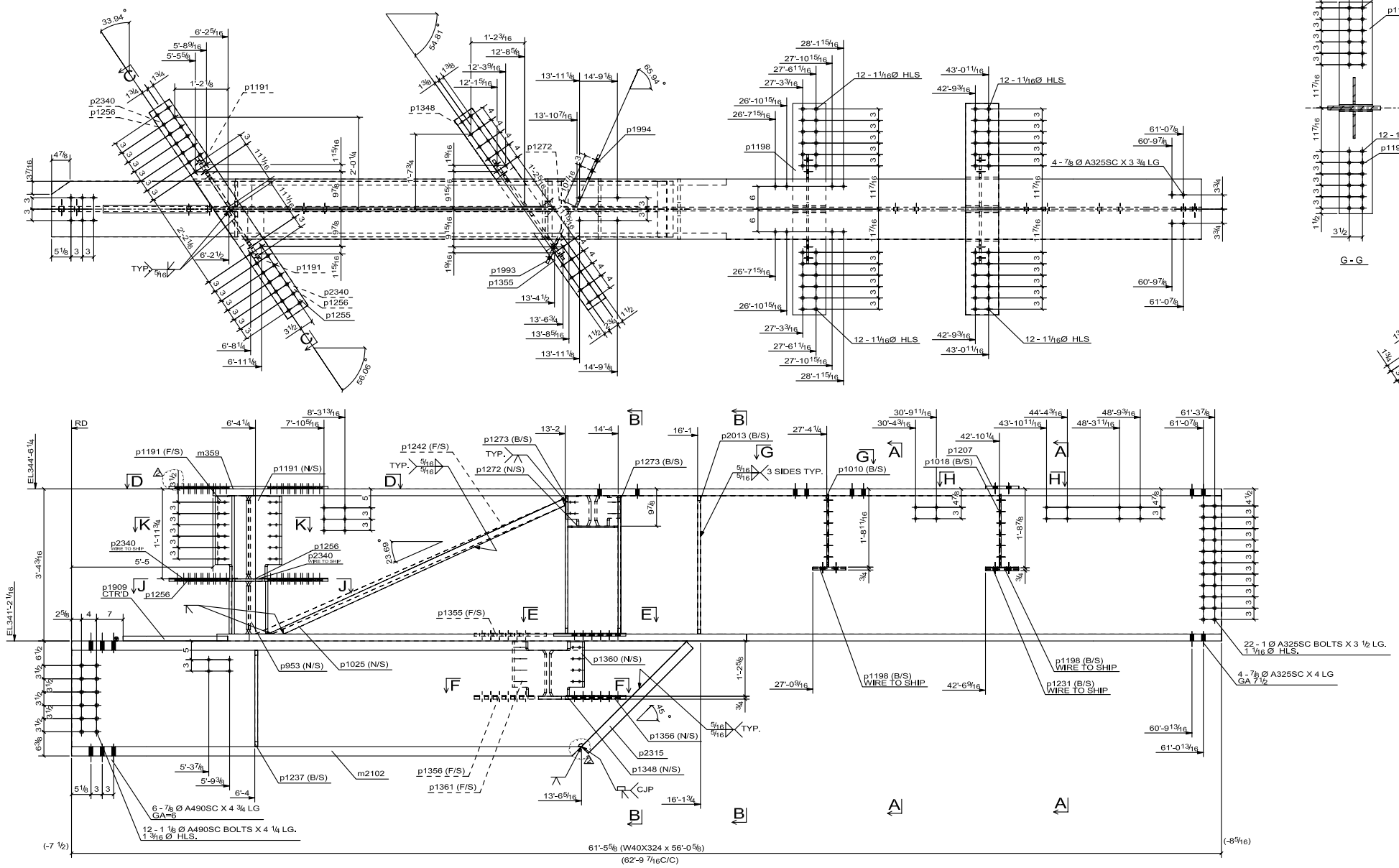

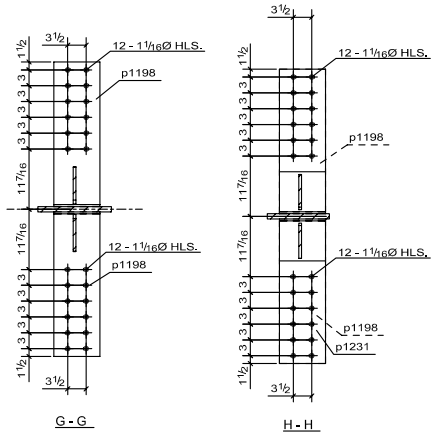

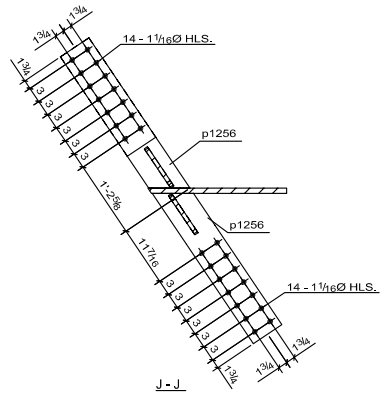

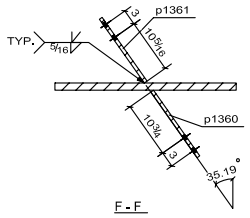

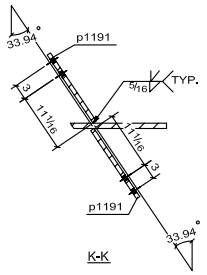

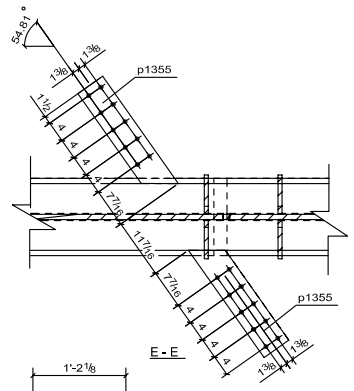

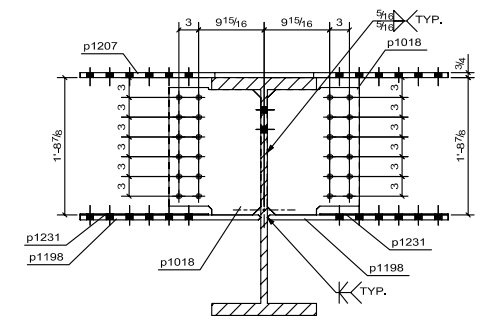

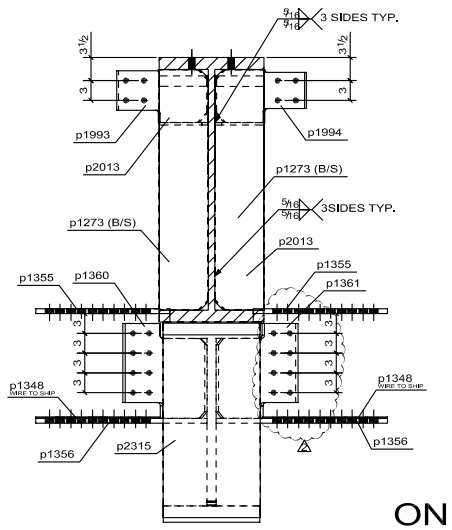

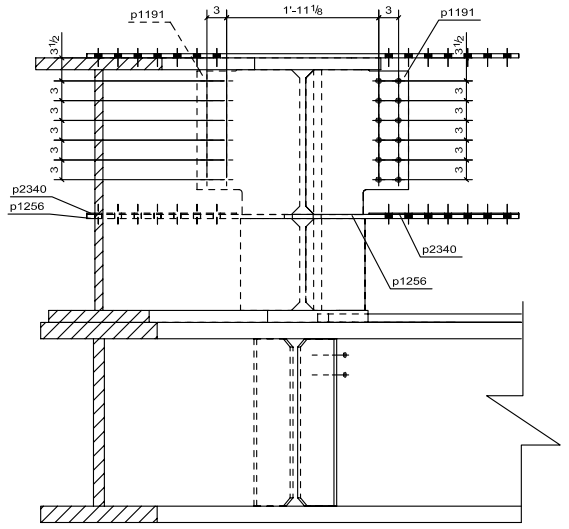

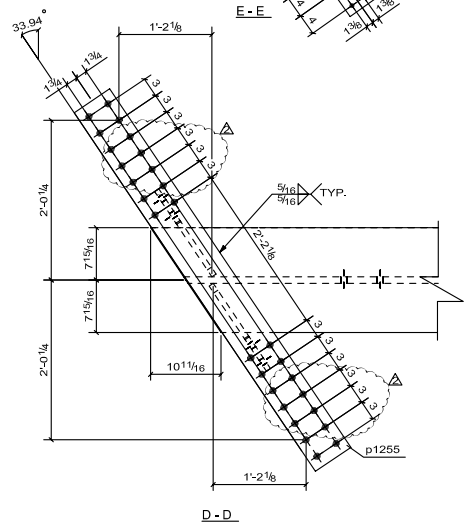

ONE BEAM A267

GRID 0-1.6/Aq

(DIV_9)

REF.DRG NO.E4

REV.	DESCRIPTION	BY	DATE

CUSTOMER

PROJECT

SUBJECT

BEAM DETAIL

DRAWN BY	CHECKED BY	DATE

CONTRACT #	DRAWING #	ISSUE